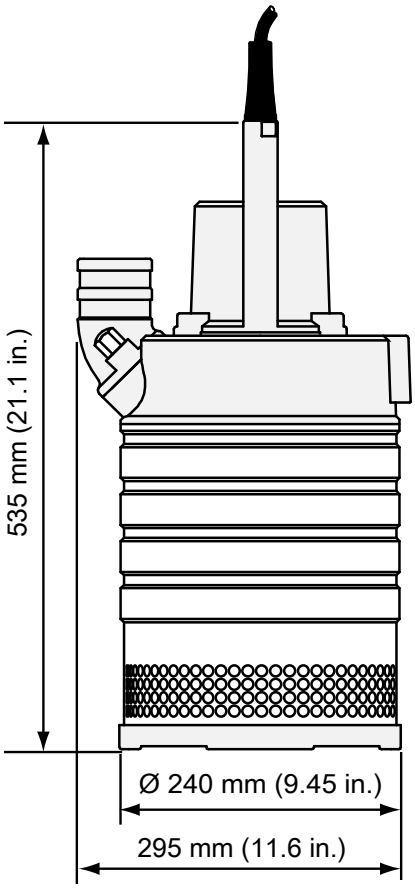
535 mm (21.1 in.)
Ø 240 mm (9.45 in.)
295 mm (11.6 in.)